34.

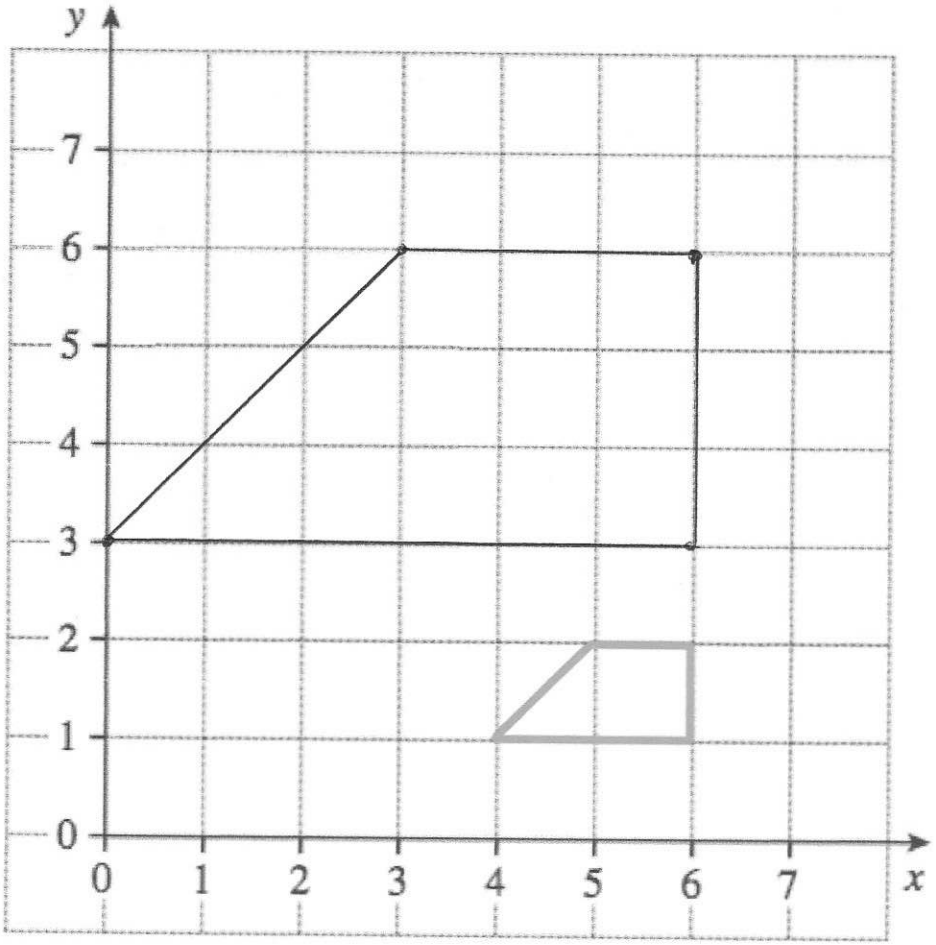

Enlarge the trapezium by scale factor 3, centre (6, 0).

(2)

© CORBETTMATHS 2019

35. A primary school has a running track.
It has two straights of 50 metres.
Also there are two 'bends' that are semicircles with diameter 30 metres.

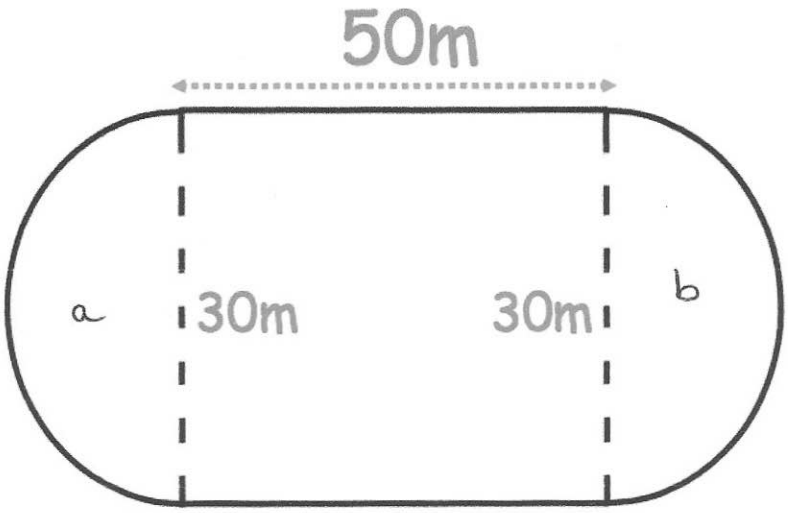

Work out the distance around the running track.

a + b = full circle

$C = \pi d$
$= \pi \times 30$
$= 94.247\ldots$

$94.247 + 50 + 50$

194.25 m
(5)

© CORBETTMATHS 2019

36 . The diagram shows a rectangle with a circle cut out.

Not drawn to scale

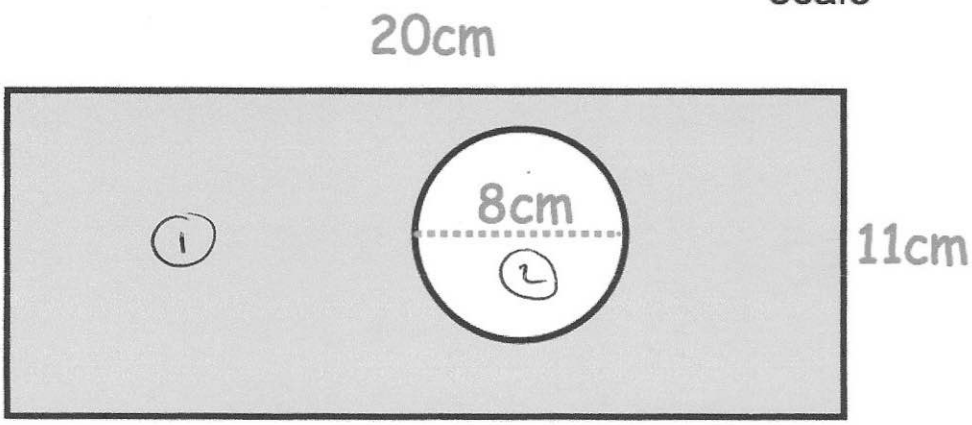

The rectangle has length 20cm and width 11cm.
The circle has diameter 8cm.

Work out the shaded area.
Give your answer correct to 2 decimal places.

1 $20 \times 11 = 220$

2 $\pi \times 4^2 = 50.265...$

$220 - 50.265...$

169.73 cm²

(4)

© CORBETTMATHS 2019

37. Below is a cylinder with radius 2cm and height 5cm.

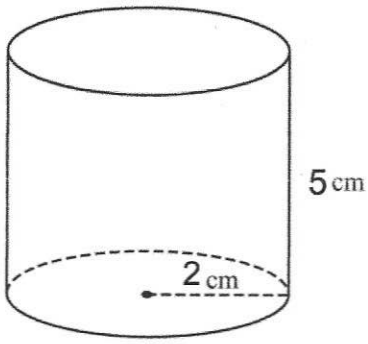

Calculate the volume of the cylinder.

$V = \pi \times r^2 \times h$

$= \pi \times 2^2 \times 5$

62.83 cm³

(3)

© CORBETTMATHS 2019

3b

Triangle ABC has a right angle.
Angle BAC is 25°
AC = 12.5cm

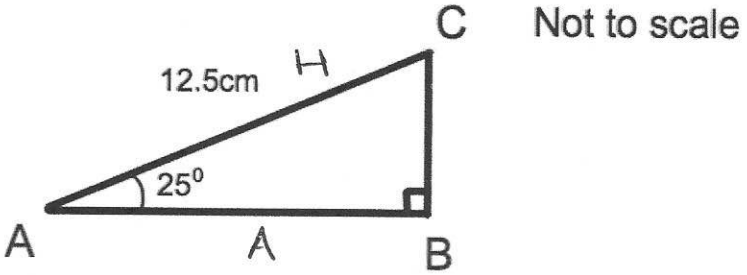

Calculate the length of AB

AB = cos(25) x 12.5

.....11.33.....cm
(3)

© CORBETTMATHS 2019

39.

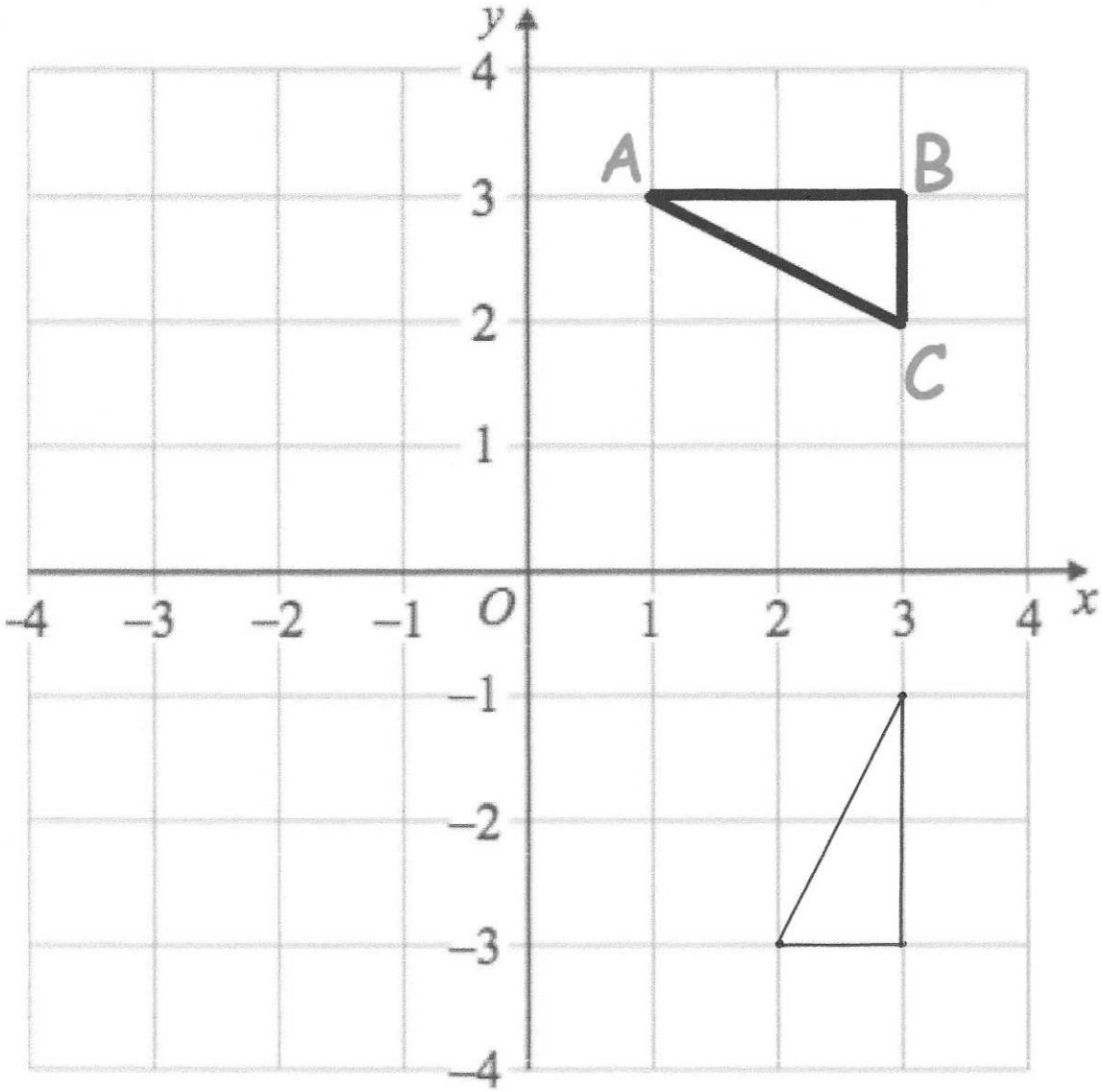

Rotate triangle ABC 90° clockwise about centre (0, 0)

(3)

© CORBETTMATHS 2019

40

Not drawn accurately

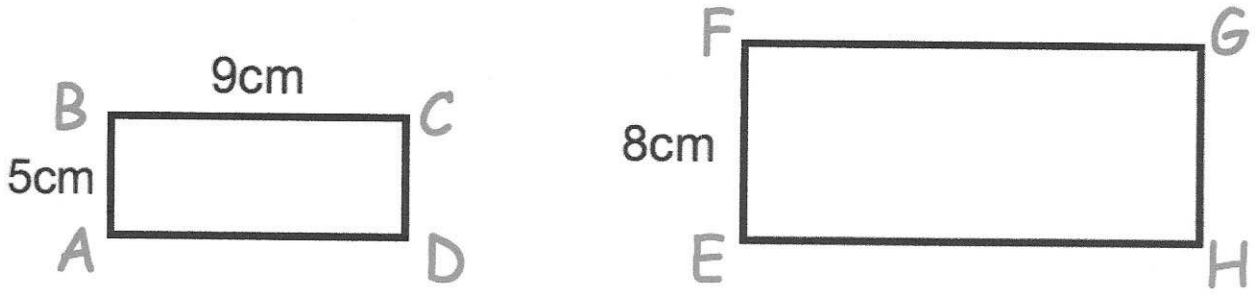

Rectangles *ABCD* and *EFGH* are similar.

AB = 5cm
BC = 9cm
EF = 8cm

8 ÷ 5 = 1.6

9 x 1.6

Work out the length of FG.

14.4 .....cm
(2)

© CORBETTMATHS 2019

41. Solve the simultaneous equations

$2x + 4y = 26$
$3x - y = 4 \quad \times 4$

Do not use trial and improvement

$$\begin{array}{rl} & 12x - 4y = 16 \\ + & 2x + 4y = 26 \\ \hline & 14x \quad = 42 \end{array}$$

$x = 3$

$9 - y = 4$

$y = 5$

x = 3 y = 5

(3)

© CORBETTMATHS 2019

42. Make *w* the subject of the formula

$$y = 3w - a$$

$+a \quad a + y = 3w \quad +a$

$\div 3 \quad \frac{a+y}{3} = w \quad \div 3$

w = $\frac{a+y}{3}$

(2)

© CORBETTMATHS 2019

43.

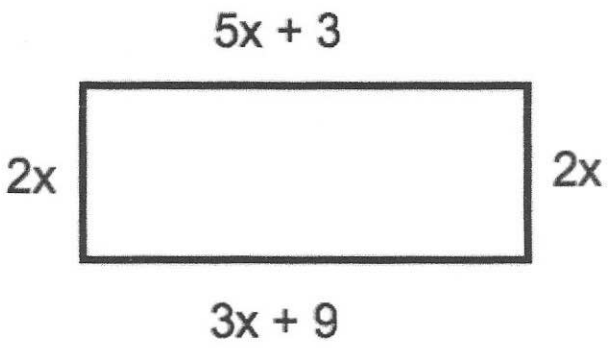

The diagram shows a rectangle. The sides are measured in centimetres.

(a) Explain why $5x + 3 = 3x + 9$

Opposite sides of a rectangle are equal. length

(1)

(b) Solve $5x + 3 = 3x + 9$

$-3x \quad 2x+3=9 \quad -3x$

$-3 \quad 2x=6 \quad -3$

$\div 2 \quad x=3 \quad \div 2$

x = 3 cm

(2)

(c) Calculate the perimeter of the rectangle.

$18 + 18 + 6 + 6$

48 cm

(2)

© CORBETTMATHS 2019

44. The table gives information about students staying after school to play sport.

Sport	Frequency		Angle
Netball	15	x6	90
Hockey	10	x6	60
Rugby	26	x6	156
Football	9	x6	54
	60		

Draw an accurate pie chart to show this information.

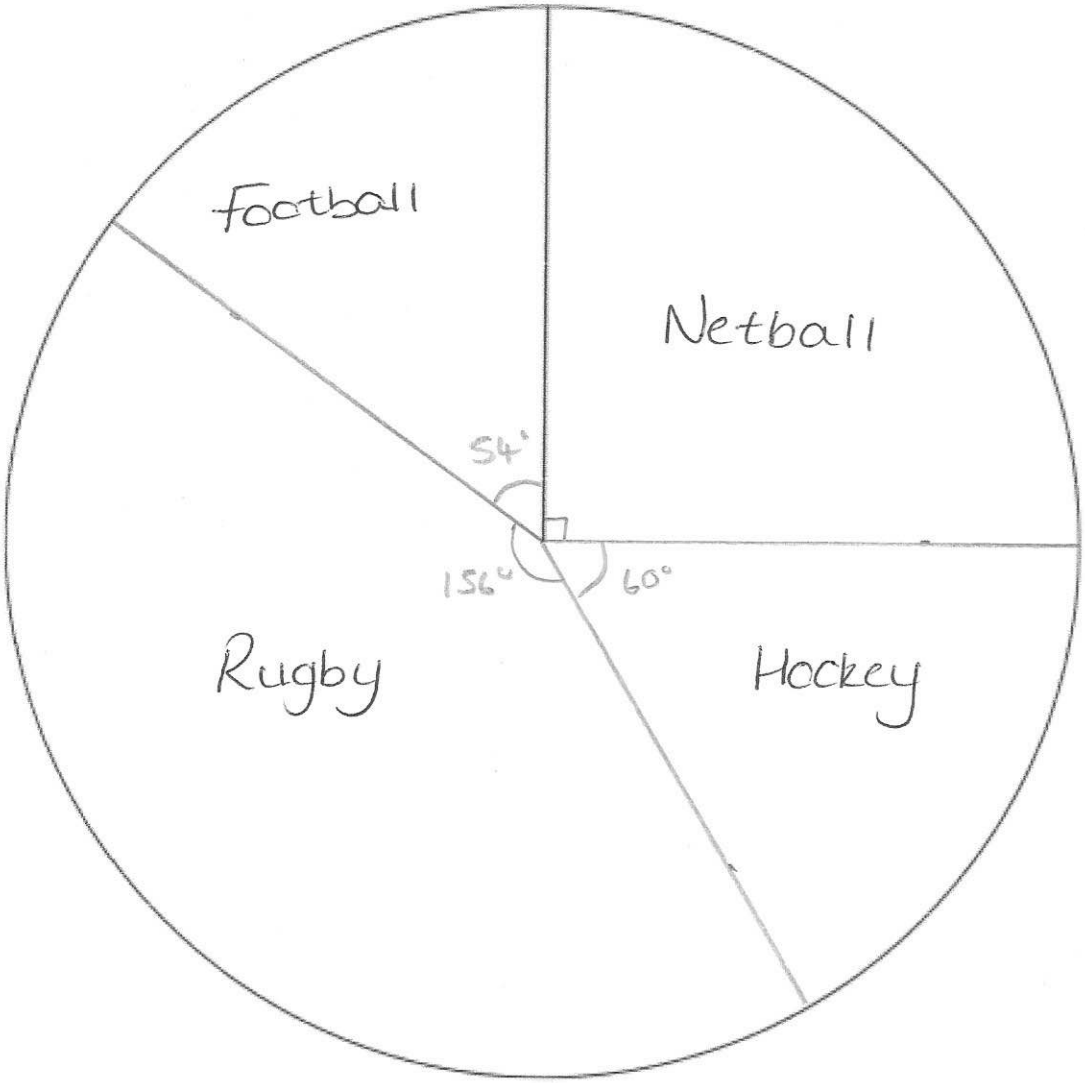

(4)

© CORBETTMATHS 2019

45.

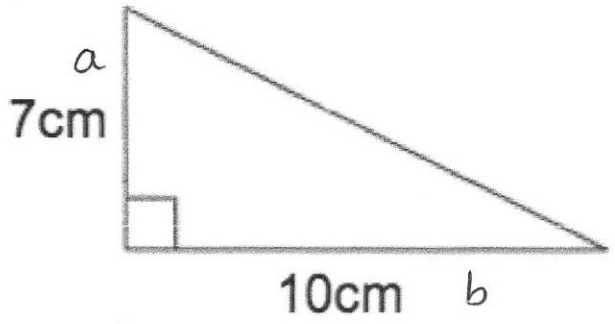

$a^2 + b^2 = c^2$

$7^2 + 10^2 = c^2$

$149 = c^2$

$c = 12.2$ cm

Shown is a right-angled triangle.

Work out the perimeter of the triangle

$7 + 10 + 12.2$

29.2 cm

(4)

© CORBETTMATHS 2019

4. A mobile phone mast has a range of 3km.

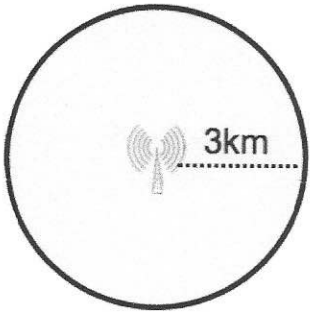

Calculate the area of the shaded region.
Give your answer to 2 decimal places.

$\pi \times 3^2$

28.27 ..... km²

(2)

© CORBETTMATHS 2019

47. This is a map of an island.

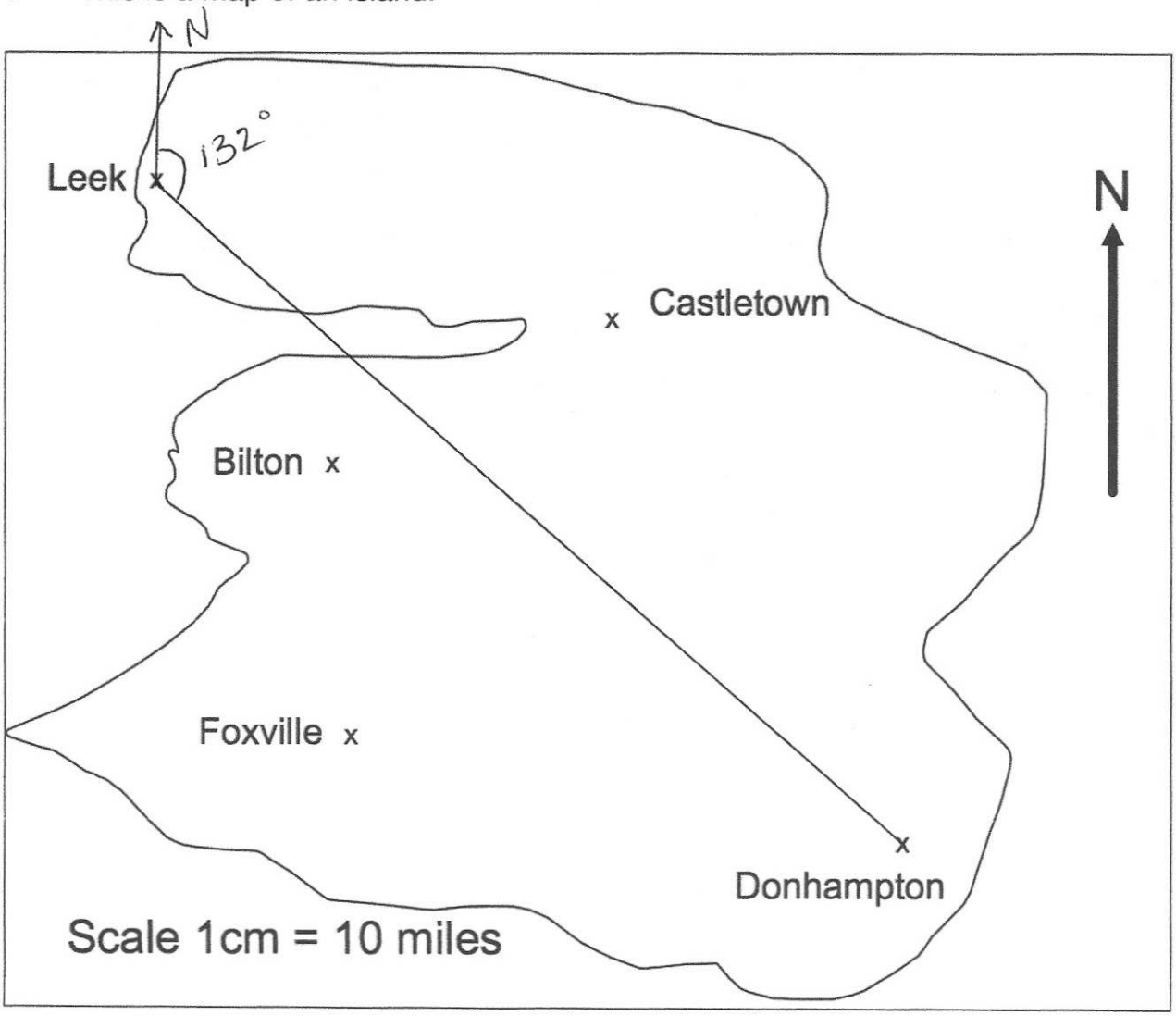

A helicopter flies in a straight line from Leek to Donhampton.

(a) How far does the helicopter fly?

☆ depends on printing size

e.g. 9.5cm on map

.....95.....miles

(2)

(b) Write down the bearing of Donhampton from Leek.

.....132.....°

(1)

© CORBETTMATHS 2019

48. Here are four digits.

9 4 7 5

(a) Use two of these digits to make the largest possible two-digit number.

97

(1)

(b) Use all four of these digits to make the four-digit number closest to 5000.

4975

(1)

© CORBETTMATHS 2019

49 (a) Work out the difference between –3°C and 4°C

.....7.....°C
(1)

At 5am the temperature is –6°C
By 2pm the temperature went up by 9°C
From 2pm to 11pm the temperature went down by 15°C

(b) Work out the temperature at 11pm

.....–12.....°C
(2)

© CORBETTMATHS 2019

50.

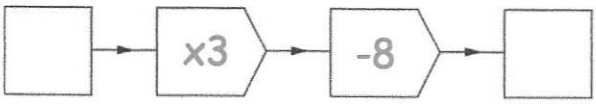

(a) Work out the output, when the input is 10.

$10 \times 3 = 30$

$30 - 8 = 22$

22

(1)

(b) Work out the input, when the output is 13.

$13 + 8 = 21$

$21 \div 3 = 7$

7

(1)

(c) If the input is the same as the output, work out the input.

4

(1)

© CORBETTMATHS 2019

51 . The points A (0, 3), C (2, -3) and D (-2, -2) are shown.

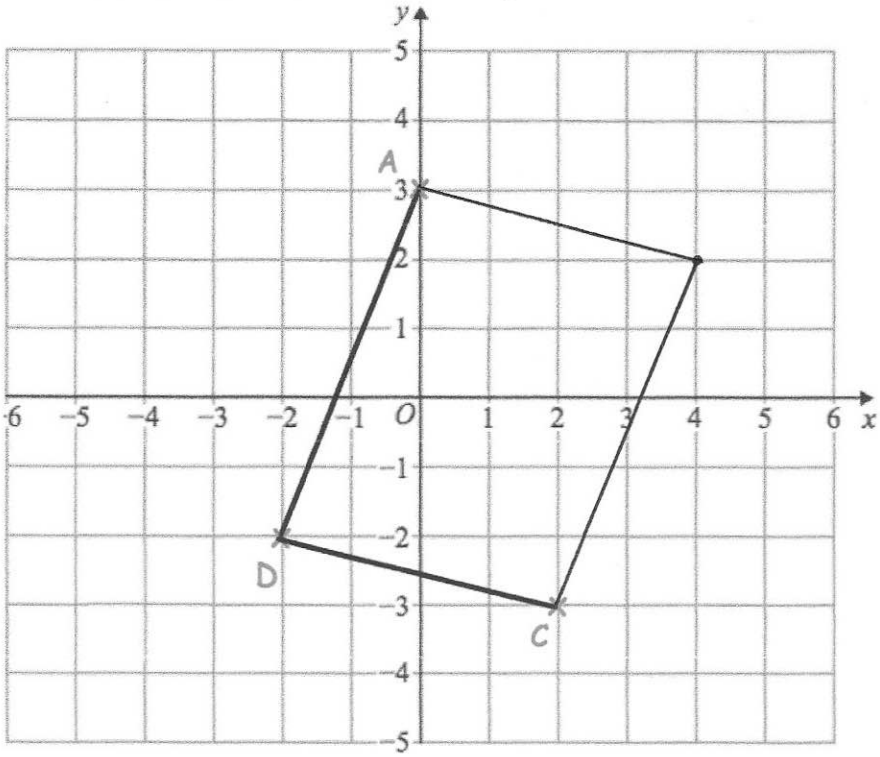

ABCD is a parallelogram.
Complete the parallelogram and write down the coordinates of B.

(4 , 2)

(2)

© CORBETTMATHS 2019

52. An airplane has economy and first class seating.
There are s seats in each row in economy.
There are t seats in each row in first class.

There are 8 rows in first class and 18 rows in economy.

Write down an expression, in terms of s and t, for the number of seats on the airplane.

$18s + 8t$

(2)

© CORBETTMATHS 2019

53. Below is a solid.

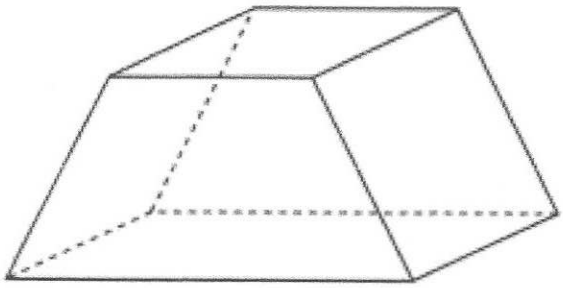

(a) Write down the number of faces

6
.....
(1)

(b) Write down the number of vertices

8
.....
(1)

© CORBETTMATHS 2019

54. Here is part of a timetable for a bus.

Southville	09 18	10 38	12 05
Leek	09 28	10 48	-------
Milton	09 41	11 01	-------
Newtown	09 49	11 09	-------
Red Island	09 55	11 15	12 36
Sandville	10 13	11 33	-------
Bakerstown	10 31	11 51	13 00

A bus leaves Southville at 10 38

(a) At what time should the bus arrive at Newtown?

11:09

(1)

(b) How long will the journey take?

31 minutes

(1)

James arrives at the Milton bus stop at 09 29.
He waits for the next bus to Red Island.

(c) (i) How many minutes should he wait?

12 minutes

(1)

(ii) At what time should James arrive at Red Island?

09:55

(1)

Sally wants to travel from Southville to Bakerstown.
The 12 05 is an 'express' bus.

(d) How many minutes shorter is the journey if she takes the 'express bus?'

18 minutes

(2)

© CORBETTMATHS 2019

55

Bilton				
23	Newtown			
28	30	Portsville		
23	11	32	Leek	
55	42	67	14	Castletown

The table above shows the distance in miles between some cities.

(a) Write down the distance between Bilton and Leek.

.....23..... miles
(1)

James drives from Newtown to Castletown.
He then drives from Castletown to Bilton.
He then drives from Bilton to Leek.

(b) Work out the total distance travelled.

$$\begin{array}{r} 23 \\ 42 \\ +\ 55 \\ \hline \end{array}$$

.....120..... miles
(2)

© CORBETTMATHS 2019

56. Below is a line graph that shows the population of a village.

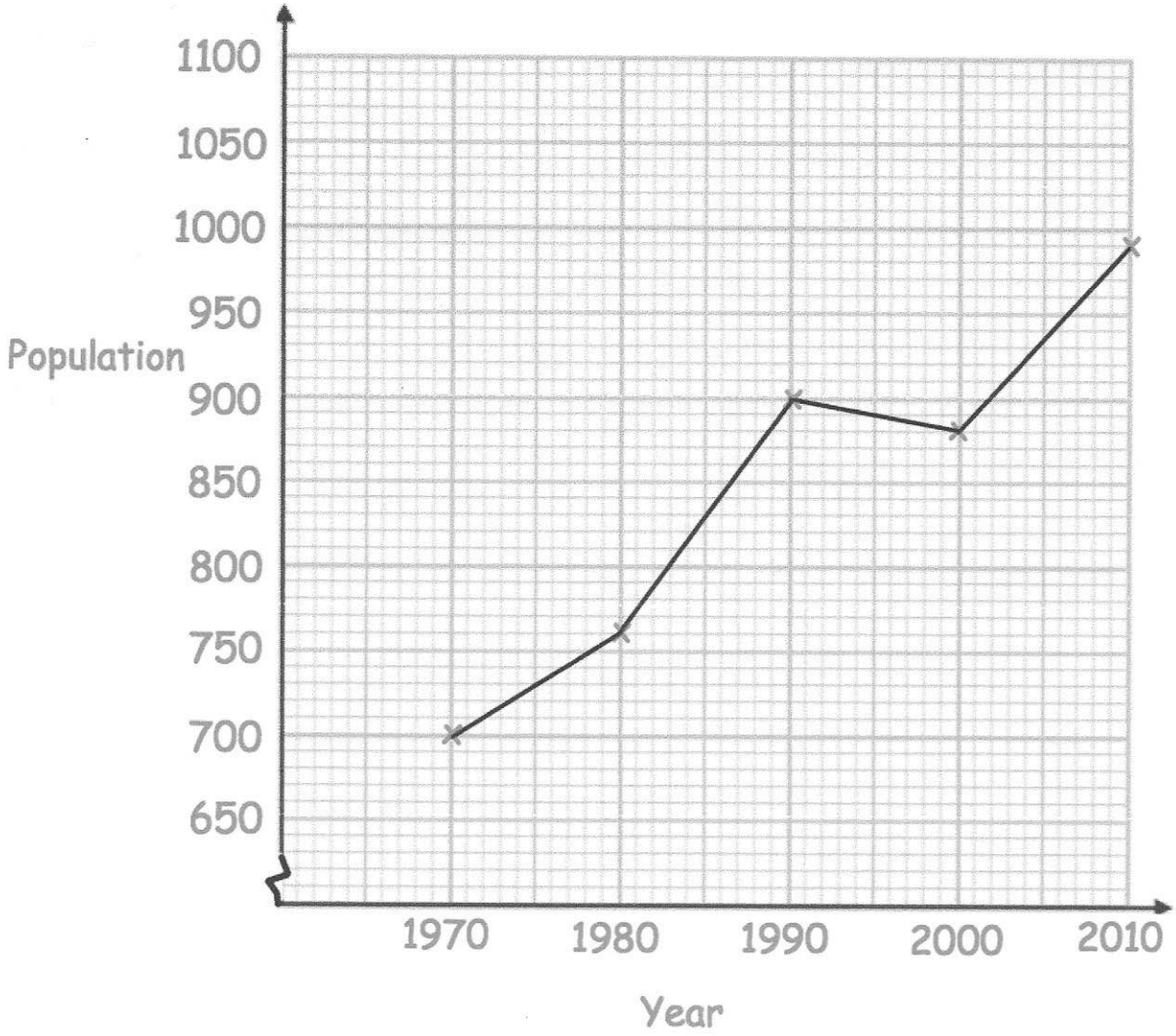

(a) What was the population in 1980?

760 .....

(1)

(b) In which year was the population 700?

1970 .....

(1)

The population is expected to increase by 120 by 2020.

(c) Work out the expected population in 2020.

990 + 120

1110 .....

(2)

© CORBETTMATHS 2019

57. The table shows the distance travelled to school by 50 students.

Distance (miles)	Frequency
$0 < d \leq 2$	20
$2 < d \leq 4$	12
$4 < d \leq 6$	11
$6 < d \leq 8$	4
$8 < d \leq 10$	3

(a) Draw a frequency polygon to represent this data.

(2)

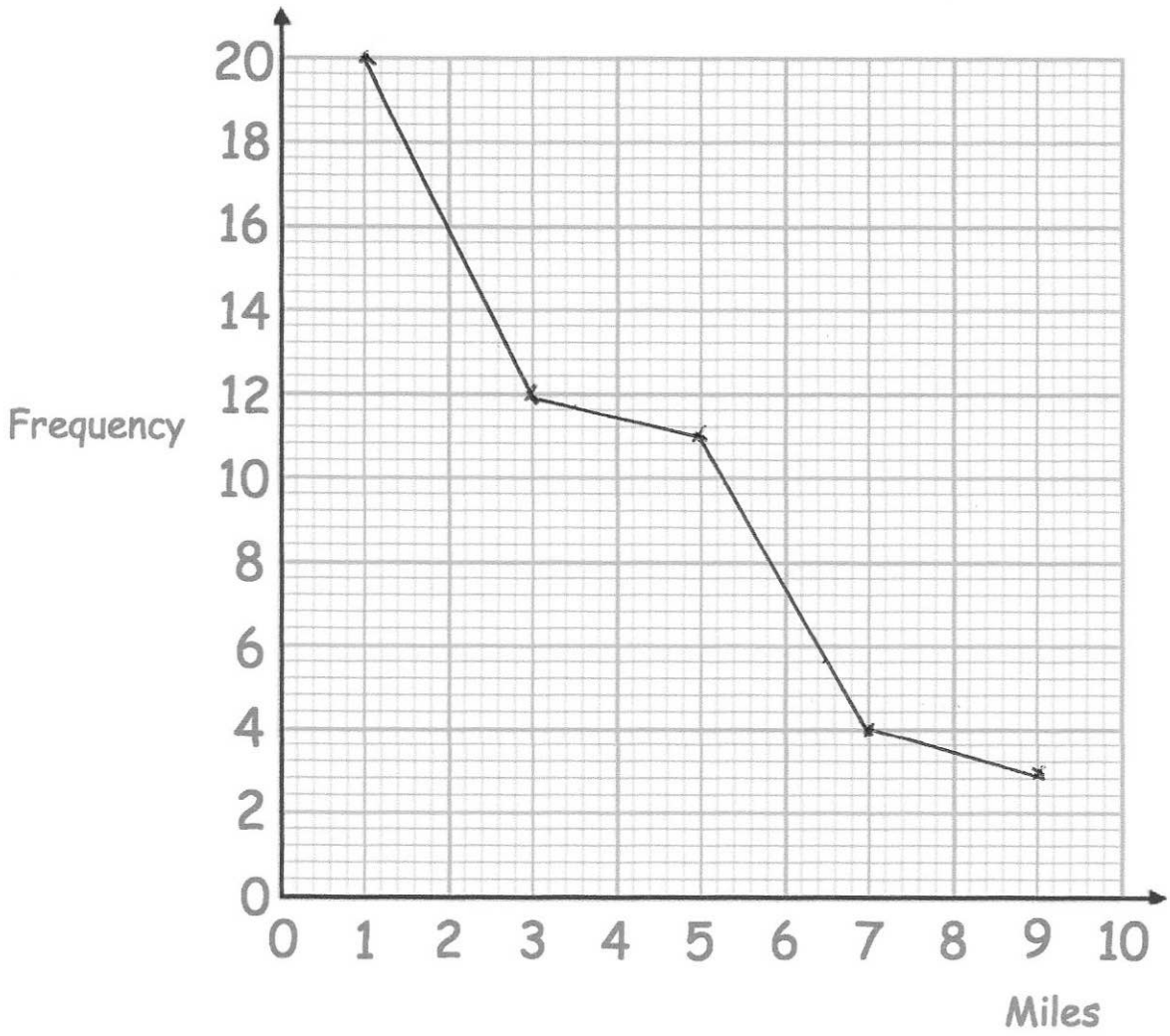

One student is chosen at random.

(b) Work out the probability that this student travels more than 6 miles to school.

$\frac{7}{50}$

(1)

58. William is going to attend a two day summer camp at his local leisure centre. He can take part in one activity on Monday and one activity on Tuesday.

Monday	Tuesday
Golf	Ice-skating
Football	Swimming
Rugby	Dodgeball
Hockey	Basketball

List all the possible combinations of activity he can take part in.

GI GS GD GB

FI FS FD FB

RI RS RD RB

HI HS HD HB

(2)

© CORBETTMATHS 2019

59. The number of passengers on 10 buses was recorded.
The stem and leaf diagram shows this information.

Key: 1 | 4 means 14 passengers

0	7 9
1	4 5 6 8 8
2	1 3
3	0

(a) Work out the median.

17

(1)

A bus is selected at random.

(b) What is the probability the bus has more than 20 passengers?

$\frac{3}{10}$

(1)

The next bus has 32 passengers.

(c) Tick the box to show how this will effect the range.

The range will decrease	The range will stay the same	The range will increase
☐	☐	☑

30 - 7 = 23

32 - 7 = 25

(1)

© CORBETTMATHS 2019

60.

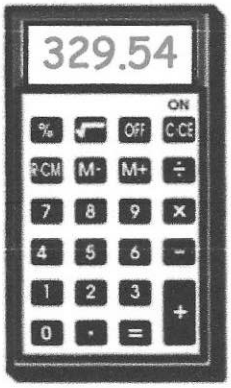

Holly works out the answer to 135.66 + 193.88 on a calculator.

Her answer is shown on the calculator.

(a) Round her answer to the nearest 10.

330

(1)

(b) Round her answer to the nearest 100.

300

(1)

(c) Round her answer to the nearest integer.

330

(1)

(d) Round her answer to one decimal place.

329.5

(1)

© CORBETTMATHS 2019

Not on Unseen topic paper.

ignore

Put brackets in the following statements to make them true

(a) $6 \times (7 + 3) - 8 = 52$

(1)

(b) $(4 + 3) \times (7 - 1) = 42$

(1)

---

61 . Joanne sees this special offer in a shop.

Special Offer	
iPod	£189
Headphones	£25
Buy both items and receive a 4% discount	

Joanne buys both items.

How much does she pay?

189 + 25 = 214

1% = 2.14

4% = 8.56

214 - 8.56

£ 205.44

(3)

© CORBETTMATHS 2019

62. The angles in a triangle are in the ratio 1 : 2 : 9

What is the size of the largest angle?

$1 + 2 + 9 = 12$

$180 \div 12 = 15$

$15 \times 9 = 135°$

135°

(2)

---

63. 62 people took part in a talent show
39 of the people were women.
11 people made it through to the final and the rest were eliminated.
5 men made it through to the final

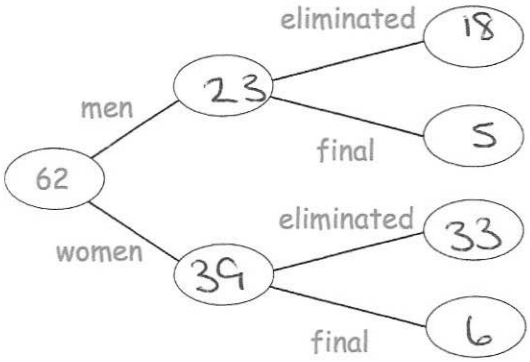

a) Complete the frequency tree

(2)

b) What fraction of the men made it through to the final? $\frac{5}{23}$

(2)

© CORBETTMATHS 2019

64.

$21 \times 2 = 42$

$42 \div 6 = 7\text{cm}$

65. $\xi = \{1, 2, 3, 4, 5, 6, 7, 8, 9, 10, 11, 12, 13, 14, 15, 16\}$

A = multiples of 3
B = multiples of 5

(a) Complete the Venn diagram

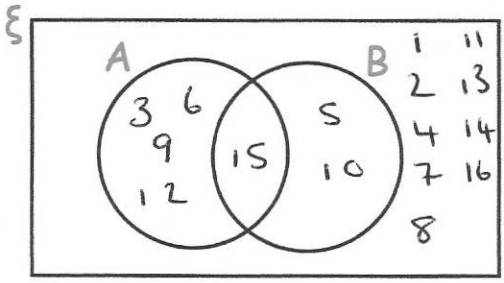

(3)

One of the numbers is selected at random.

(b) Write down P (A ∩ B)

$\frac{1}{16}$

(1)

© CORBETTMATHS 2019

66. Chris and Molly win money in a competition.
They share the money in the ratio 2 : 3
Molly receives £240.

(a) How much money does Chris receive?

$240 \div 3 = 80$

$80 \times 2 = 160$

£ 160

(2)

(b) How much money did they win in the competition?

£ 400

(1)

---

67. Work out

$$10^{-2}$$

Give your answer as a decimal.

$\frac{1}{10^2} = \frac{1}{100}$

0.01

(2)

© CORBETTMATHS 2019